Electrolux

Gas Cooktops

EW30GC55G S, EW30GC55G W, EW30GC55G B

30" GAS COOKTOPS

Features	
Deep-Well Formed Cooktop	Yes
Professional-Grade Burner Controls	Yes
Continuous Grates	Yes
Min-2-Max® Dual-Flame Sealed Burner – 18,000 - 450 BTU	1
Sealed Power Burner – 14,000 BTU	1
Sealed Precision Burner – 9,500 BTU	1
Sealed Precision Burner – 5,000 - 850 BTU	1
Linear Flow Burner Valves	Yes
Electric Pilotless Ignition	Yes
A.D.A. Compliant*	Yes
Accessories	
Granite Countertop Installation Kit – PN# 903103-9010	Optional
Grill/Griddle – PN# 318251608	Mail-In Card
Wok Ring – PN# 318254307	Optional
Simmer Plate – PN# 318254208	Optional
LP Gas Conversion Kit	Included
Specifications	
Color –	
Stainless Steel	S
White	W
Black	B
Product Dimensions –	
Width	30"
Depth	21-3/4"
Height (Extreme Bottom to Underside of Cooktop)	4-1/4"
Gas/Power Supply Connection Location	Right Rear
Voltage Rating	120V/60Hz/15A
Connected Load (kW Rating) @ 120 Volts‡	.001
Electrical Cable	Yes
Approved for Single Oven Combination Installation**	Yes
Approved for Downdraft Combination Installation**	Yes
Shipping Weight (Approx.)	54 Lbs.

When properly installed, meets the appliance standards in the Americans with Disabilities Act and the Architectural Barriers Act Accessibility Guidelines as published by the United States Access Board on June 23, 2004, as amended August 5, 2005.

‡For use on adequately wired 120V, dedicated circuit having 2-wire service with a separate ground wire. Appliance must be grounded for safe operation.

NOTE: Always consult local and national electric and gas codes. Refer to Product Installation Guide for detailed installation instructions on the web at electroluxappliances.com.

Specifications subject to change.

***Approved to be used over any Electrolux Single Wall Oven OR in combination with any Electrolux 30" Downdraft Vent.*

Min-2-Max® Burner

Designed with a dual-flame sealed burner, this cooktop offers the widest range of BTU performance in the industry for the utmost versatility–from a roaring 18,000-BTU boil to a gentle 450-BTU simmer.

Continuous Grates

Designed for cooking multiple dishes at varying temperatures on a single cooktop. These grates allow easy movement of even the heaviest pots and pans from burner to burner–without lifting.

Professional-Grade Control Knobs

Eliminate guesswork while cooking with more precise control and better feel.

Deep-Well Design

Keeps spills contained for easy cleanup and lowers the cooking surface to countertop level, which makes moving oversized pots and pans onto and off of the cooking surface much easier.

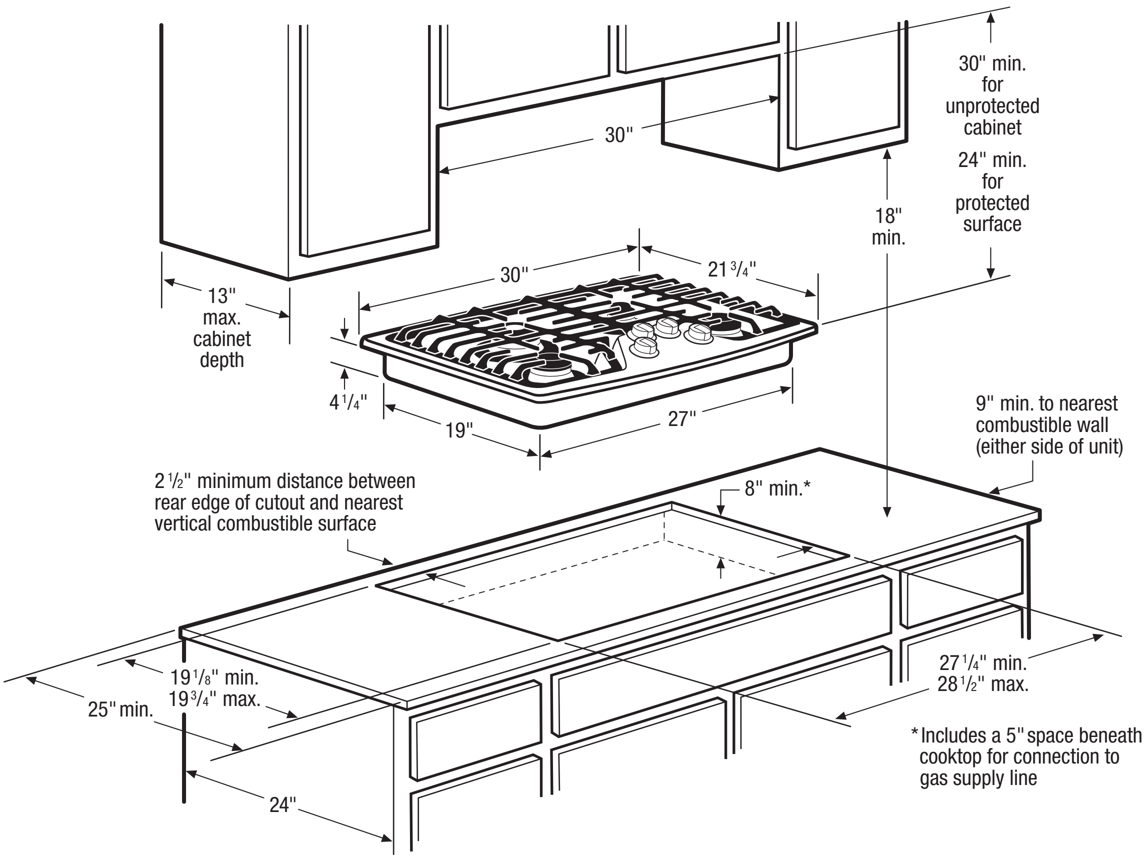

30" Gas Cooktop Specifications

- Product Weight – 43 Lbs.
- Voltage Rating – 120V/60 Hz/15 Amps
- Connected Load (kW Rating) @120 Volts = .001 kW (For use on adequately wired 120V, dedicated circuit having 2-wire service with a separate ground wire. Appliance must be grounded for safe operation.)
- Amps @120 Volts = 1.0 Amps
- Always consult local and national electric and gas codes.
- Recommended location for grounded 120V outlet is on rear wall in an 8" wide by 10" high area, positioned 22" above floor surface and 4" from right side of cooktop centerline. Access to underside of cooktop and junction box must be provided for inspection and service.
- Cooktop ships with 3/4" factory regulator.
- LP Gas conversion kit supplied.
- Overhead cabinetry should not exceed a 13" maximum depth.
- Allow 30" minimum clearance between top of cooktop and bottom of unprotected wood or metal overhead cabinetry.
- Absolute minimum horizontal distance between overhead cabinets installed to either side of appliance must be no less than 30".
- Allow 24" minimum clearance when bottom of wood or metal overhead cabinet is protected by not less than 1/8" flame-retardant millboard covered with not less than No. 28 MSG sheet steel, 0.015" stainless steel, 0.024" aluminum or 0.020" copper.
- Allow 2-1/2" minimum distance between rear edge of cutout and nearest combustible surface above countertop.
- Allow 9" minimum clearance from edge of cooktop to nearest combustible wall on either side of unit.
- Installation of drawers beneath cooktop requires minimum 6-1/2" clearance beneath countertop surface and assured clearance for gas and electrical connections.
- To reduce risk of fire when using overhead cabinetry, install range hood that projects horizontally a recommended minimum of 5" beyond bottom of cabinets.
- Gas Cooktop model EW30GC55G is approved to be used over any Electrolux Electric Single Wall Oven. *(Refer to Gas Cooktop Installation Over 30"/27" Electric Single Wall Oven Specifications page on web.)*
- Gas Cooktop model EW30GC55G is approved to be used in combination with any Electrolux 30" Downdraft Vent. *(Refer to model-specific Downdraft Vent product page on web for detailed countertop preparation specifications.)*

Note: For planning purposes only. Refer to Product Installation Guide on the web at electroluxappliances.com for detailed instructions.

Optional Accessories

- Granite Countertop Installation Kit – (PN# 903103-9010).
- Simmer Plate – (PN# 318254208).
- Wok Ring – (PN# 318254307).

Electrolux Major Appliances, N.A.

USA • 10200 David Taylor Drive • Charlotte, NC 28262 • 1-877-4electrolux (1-877-435-3287) • electroluxappliances.com
CANADA • 5855 Terry Fox Way • Mississauga, ON L5V 3E4 • 1-800-265-8352 • electroluxappliances.ca

High standards of quality at Electrolux Home Products, Inc. mean we are constantly working to improve our products. We reserve the right to change specifications or discontinue models without notice.

© 2011 Electrolux Home Products, Inc.

Printed in the U.S.A.

Gas Cooktop Installation
Over 30"/27" Electric Single Wall Oven

Electrolux

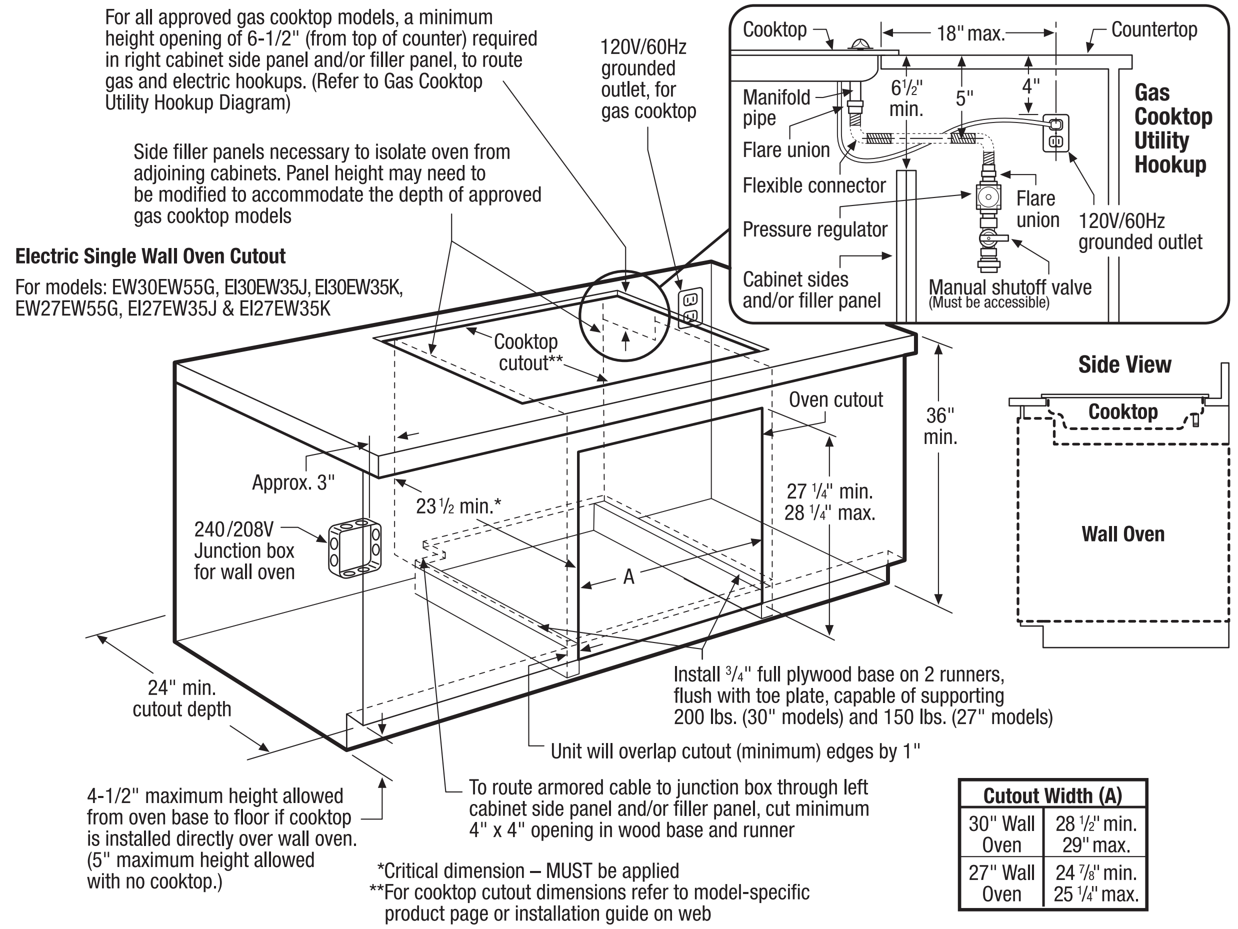

Cutout Width (A)	
30" Wall Oven	28 1/2" min. 29" max.
27" Wall Oven	24 7/8" min. 25 1/4" max.

30" & 27" Electric Single Wall Ovens Under-Counter Installation Specifications

- Product Weights – (EW30EW55G, EI30EW35J and EI30EW35K) 200 Lbs. / (EW27EW55G, EI27EW35J and EI27EW35K) 150 Lbs.
- Single phase 3- or 4-wire cable, 120/240 or 120/208 Volt, 60 Hertz AC only electrical supply with ground required on separate circuit fused on both sides of line.
- Connected Load (kW Rating) @ 240/208 Volts = (30") 4.0/3.0kW / (27") 3.4/2.6kW
- Amps @ 240/208 Volts = (30")17.0/14.5 Amps / (27")14.2/12.6 Amps
- Recommended Circuit Breaker – 20 Amps
- Always consult local and national electric codes.
- Minimum 21" clearance for oven door depth when open.
- Minimum 23-1/2" deep cutout dimension is critical for proper installation, to ensure that oven's faceplate will fit flush against cabinet front.
- Full oven base of solid plywood or similar material required, capable of supporting 200 Lbs. (30" models) or 150 Lbs. (27" models). Install over two runners and flush with toe plate.
- Base must be level and cabinet front must be square.
- Allow 5" maximum height from oven base to floor, if NO cooktop is installed directly over wall oven.

Gas Cooktop Installation Over 30"/27" Electric Single Wall Oven Specifications

Electrolux Single Wall Oven models EW30EW55G, EI30EW35J, EI30EW35K, EW27EW55G, EI27EW35J and EI27EW35K are approved to be used beneath Electrolux cooktop models EW36GC55G, EW30GC55G and EW30GC60I.

For detailed Gas Cooktop installation, refer to model-specific product page and installation guide on web.

- Side filler panels necessary to isolate oven from adjoining cabinets. Panel height may need to be modified to accommodate the depth of approved gas cooktop models.
- Minimum height opening of 6-1/2" *(from top of counter)* required in right cabinet side panel and/or filler panel, to route gas and electric hookups.
- Allow 4-1/2" maximum height from oven base to floor, if cooktop is installed directly over wall oven.

Note: For planning purposes only. Refer to Product Installation Guide on the web at electroluxappliances.com for detailed instructions.

Electrolux Major Appliances, N.A.

USA • 10200 David Taylor Drive • Charlotte, NC 28262 • 1-877-4electrolux (1-877-435-3287) • electroluxappliances.com
CANADA • 5855 Terry Fox Way • Mississauga, ON L5V 3E4 • 1-800-265-8352 • electroluxappliances.ca

High standards of quality at Electrolux Home Products, Inc. mean we are constantly working to improve our products. We reserve the right to change specifications or discontinue models without notice.

© 2011 Electrolux Home Products, Inc.

Printed in the U.S.A.

Countertop Preparation for 30" & 36" Cooktop/Downdraft Vent Installation

For detailed cooktop and downdraft vent installation specifications, refer to model-specific product page and installation guide on web

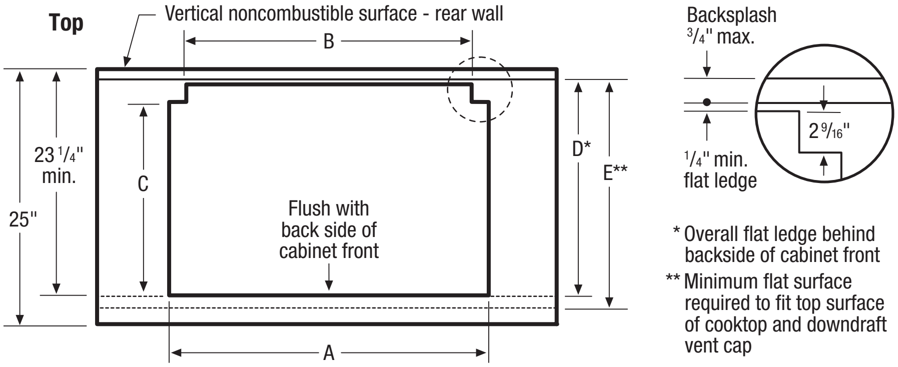

E30DD75ESS/30" Cooktop Cutout Dimensions

30" Cooktops	A	B	C	D	E
EW30IC60I	30"	27 3/4"	20 1/2"	23 5/16"	24 5/16"
EW30CC55G	30"	27 3/4"	20 1/2"	23 5/16"	24 5/16"
EW30EC55G	30"	27 3/4"	20 5/8"	23 7/16"	24 7/16"
EW30GC55G	28 1/2"	27 3/4"	19 3/4"	22 9/16"	23 9/16"
EW30GC60I	28 1/2"	27 3/4"	19 3/4"	22 9/16"	23 9/16"

E36DD75ESS/36" Cooktop Cutout Dimensions

36" Cooktops	A	B	C	D	E
EW36IC60I	36 1/4"	33 3/4"	20 1/2"	23 5/16"	24 5/16"
EW36CC55G	36 1/4"	33 3/4"	20 1/2"	23 5/16"	24 5/16"
EW36EC55G	36"	33 3/4"	20 5/8"	23 7/16"	24 7/16"
EW36GC55G	34 1/4"	33 3/4"	19 3/4"	22 9/16"	23 9/16"

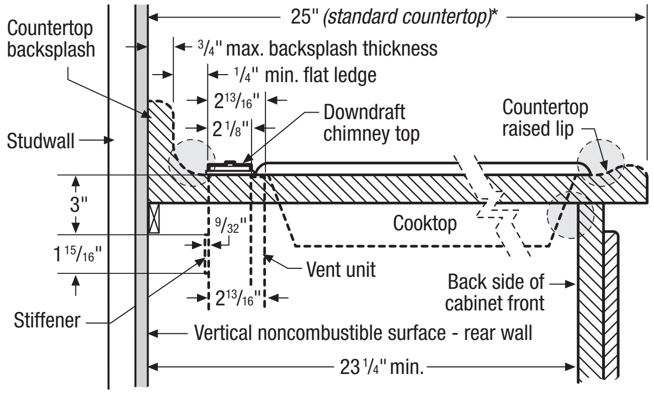

Cooktop Installation Note:
To ensure proper installation, refer to model-specific installation guide on web for cooktop dimensions, cutout dimensions and cabinet requirements. Due to varying cooktop depths, tight fit is possible between cooktop and vent.

Countertop Preparation Note:
Be aware of areas of potential interference called out in illustration. Countertop with raised lip and/or backsplash may not allow enough flat area for proper installation, 2-13/16" of flat countertop required behind cooktop. No gap required between back of cooktop and front of downdraft trim piece.

**Standard 25" countertop depth may NOT be adequate for some cooktop/vent installations, especially with backsplash.*

Cooktop/Downdraft Vent Countertop Preparation Specifications

- For detailed Cooktop installation, refer to model-specific product page and installation guide on web. Plan installation so that all required minimum clearances between cooktop, overhead cabinets and adjacent vertical walls are provided.
- Position cooktop/vent cutout so all required minimum clearances are met.
- Minimum flat countertop area must meet or exceed combined overall width and depth as shown. Standard 25" countertop depth may NOT be adequate for some cooktop/vent installations, especially with backsplash.
- Separate circuits required for cooktop and vent. *(Refer to product-specific electrical specifications.)*
- Always consult local and national electric and gas codes. Check local building codes for installation requirements, as they may vary per locale.

Downdraft Vent Specifications

- For detailed Downdraft Vent installations, refer to model-specific product page and installation guide on web.
- Voltage Rating – 120V/60Hz/15 Amps
- Connected Load (kW Rating) @120 Volts = 1.0kW (For use on adequately wired 120V, dedicated circuit having 2-wire service with a separate ground wire. Appliance must be grounded for safe operation.)
- Amps @120 Volts = 8.0 Amps
- Vent unit outside of building only.
- Vent must be installed in vertical orientation only.
- 1,600 CFM remote exhaust blower (PN#5304444802) included with vent – shipped in separate box.
- Do not use flexible duct. Round duct instead of rectangular duct recommended, especially when elbows are required.
- When multiple elbows are necessary, ensure a minimum of 24" of straight duct between any two elbows.
- Thermal breaks such as short section of nonmetallic duct, should be used in areas of extreme cold.
- For most efficient airflow exhaust, use a straight run or as few elbows as possible.
- Cold weather installations should have additional backdraft damper installed.
- Installing a Downdraft Vent in combination with any gas cooking surface will affect optimum burner efficiency.

Note: For planning purposes only. Refer to Product Installation Guide on the web at electroluxappliances.com for detailed instructions.

Electrolux Major Appliances, N.A.

USA • 10200 David Taylor Drive • Charlotte, NC 28262 • 1-877-4electrolux (1-877-435-3287) • electroluxappliances.com
CANADA • 5855 Terry Fox Way • Mississauga, ON L5V 3E4 • 1-800-265-8352 • electroluxappliances.ca

High standards of quality at Electrolux Home Products, Inc. mean we are constantly working to improve our products. We reserve the right to change specifications or discontinue models without notice.

© 2010 Electrolux Home Products, Inc.

Printed in the U.S.A.